TEAR SHEET

Hargett Bridge Arm Floor Lamp
Item # SP 1505BZ-L

Designer: J. Randall Powers

Height: 50" - 56.5"
Extension: 17"
Base: 10" Round
Finishes: BZ, HAB, PN
Shade Treatments: L, NP
Shade Details: 2.5" x 12" x 7.5"
Socket: E26 Dimmer
Wattage: 60 A19
Weight: 16 Pounds

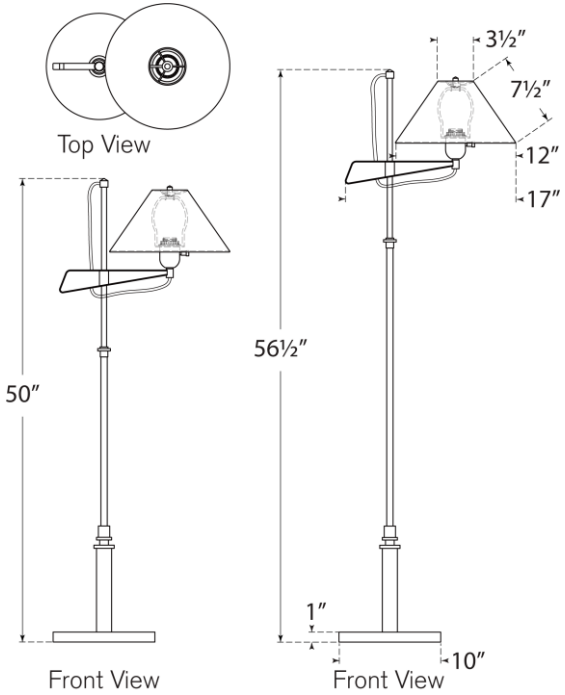

VISUAL COMFORT & CO.